Q.2 A square base pyramided side 96 mm and height 119 mm ,axis perpendicular to HP cut by a section plane, section inclined to HP at 35 degree cut the axis 45 mm above the base.
Sol.

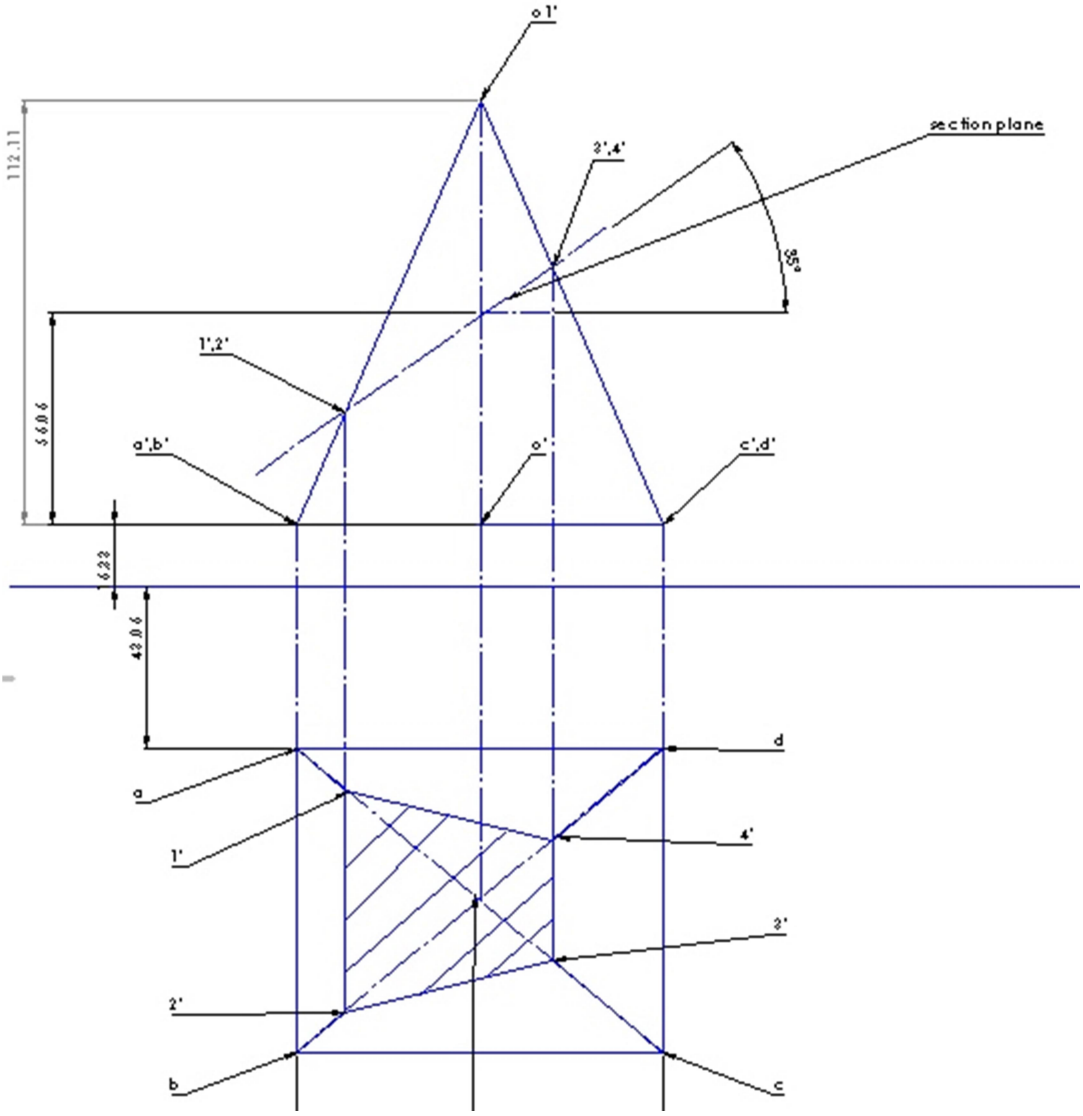

Case 4– axis perpendicular to HP and cut by a section Plane and section plane inclined to VP.

Q.1 A square base prism side 76 mm and height 119 mm ,axis perpendicular to HP cut by a section plane, section plane incline to VP at 40 degree and 20 mm above the center.
Sol.

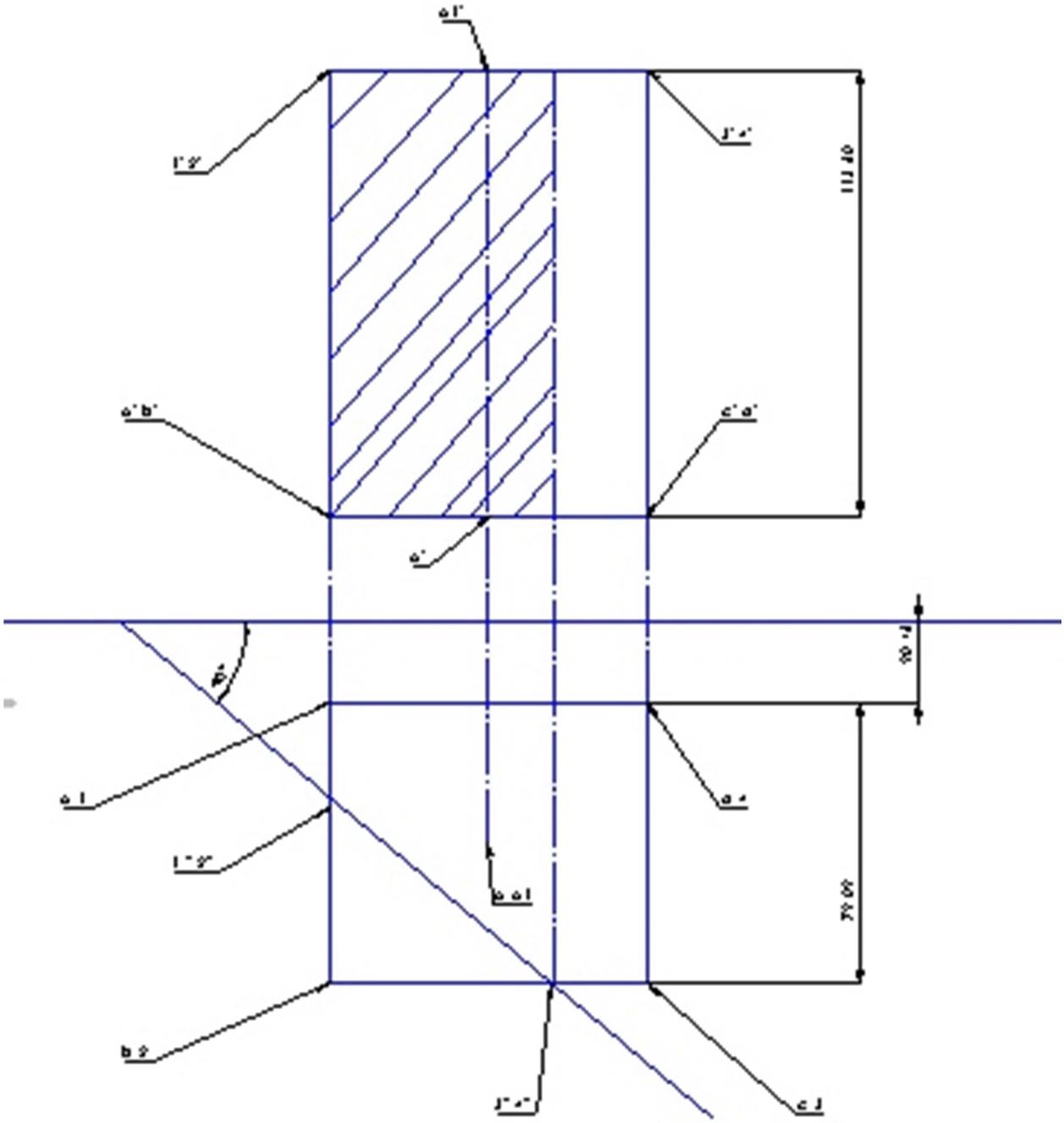

Q.2. A square base pyramided side 76 mm and height 119 mm ,axis perpendicular to HP cut by a section plane, section plane incline to VP at 40 degree and 20 mm above the center.

Sol.

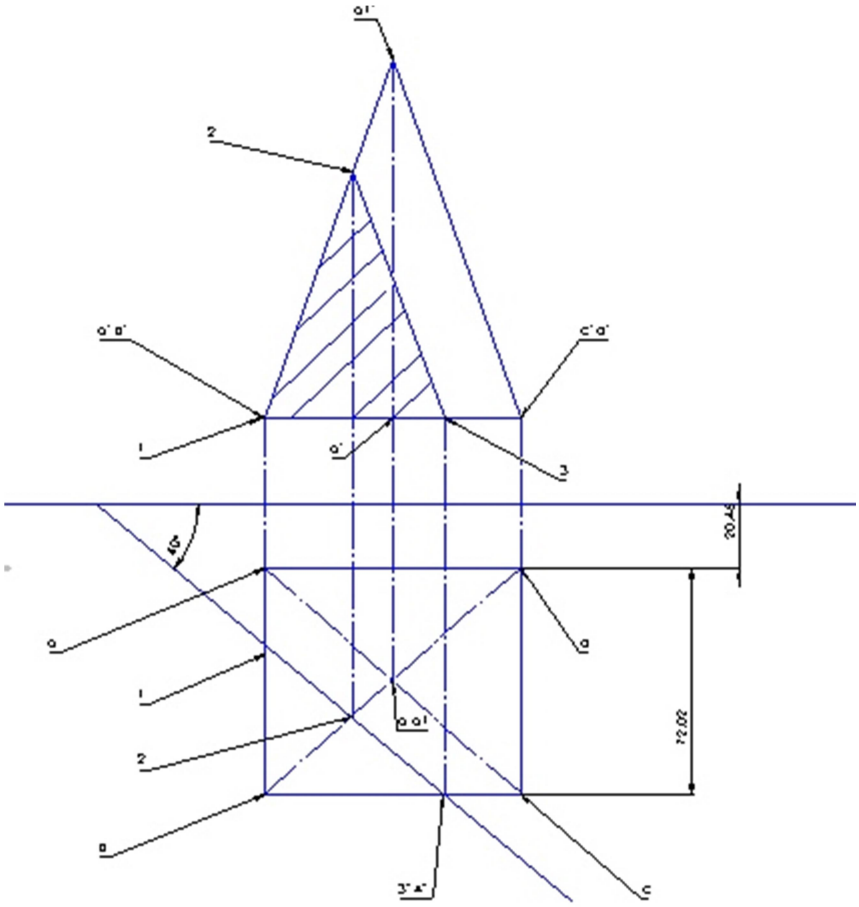

Case 5 – axis inclined to HP and cut by a section Plane and section plane parallel to HP.

Q.1. A square base pyramided side 75 mm and height 119 mm ,axis inclined to HP at 35^0 cut by a section plane, parallel to HP and cut the axis 45 mm above the base.

Sol.

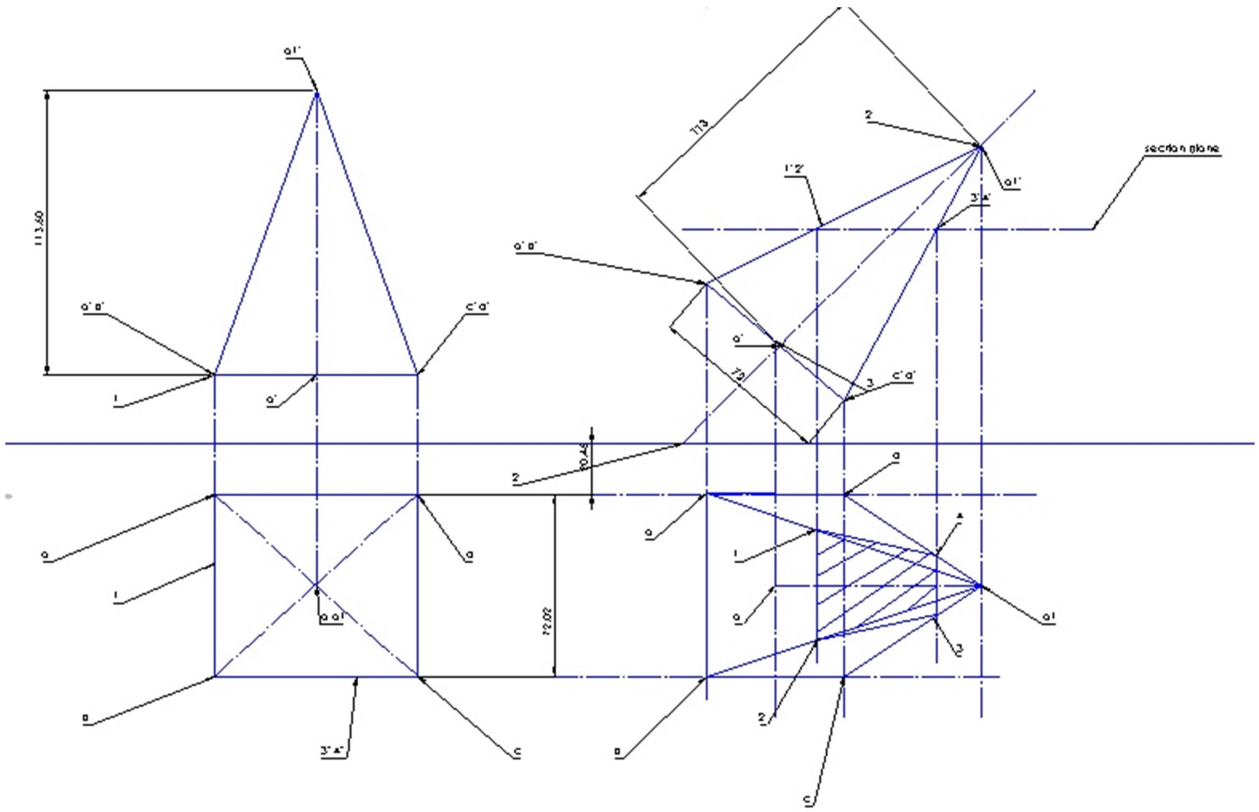

113.60
113
72.02
20.45
73
section plane

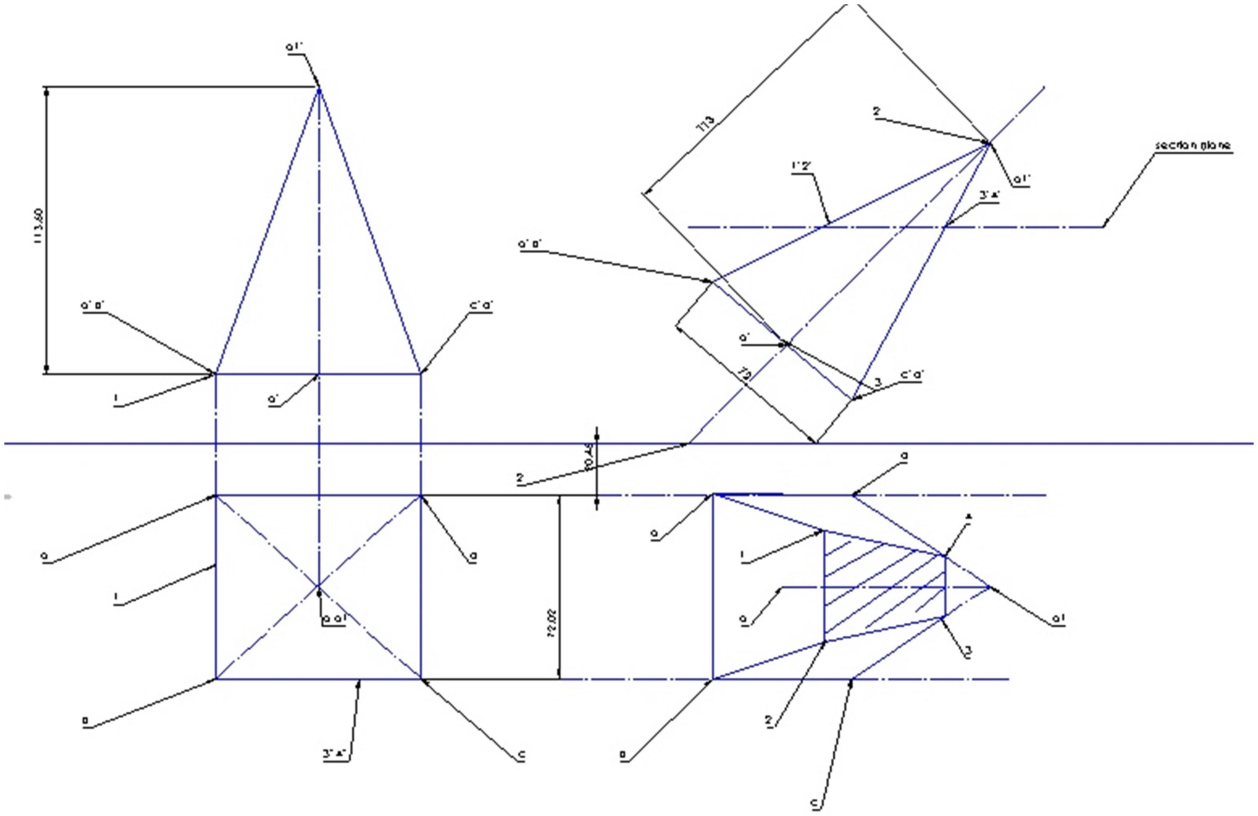

Q.2. A square base prism side 75 mm and height 119 mm ,axis inclined to HP at 35^0 cut by a section plane, parallel to HP and cut the axis 45 mm above the base.

Sol.

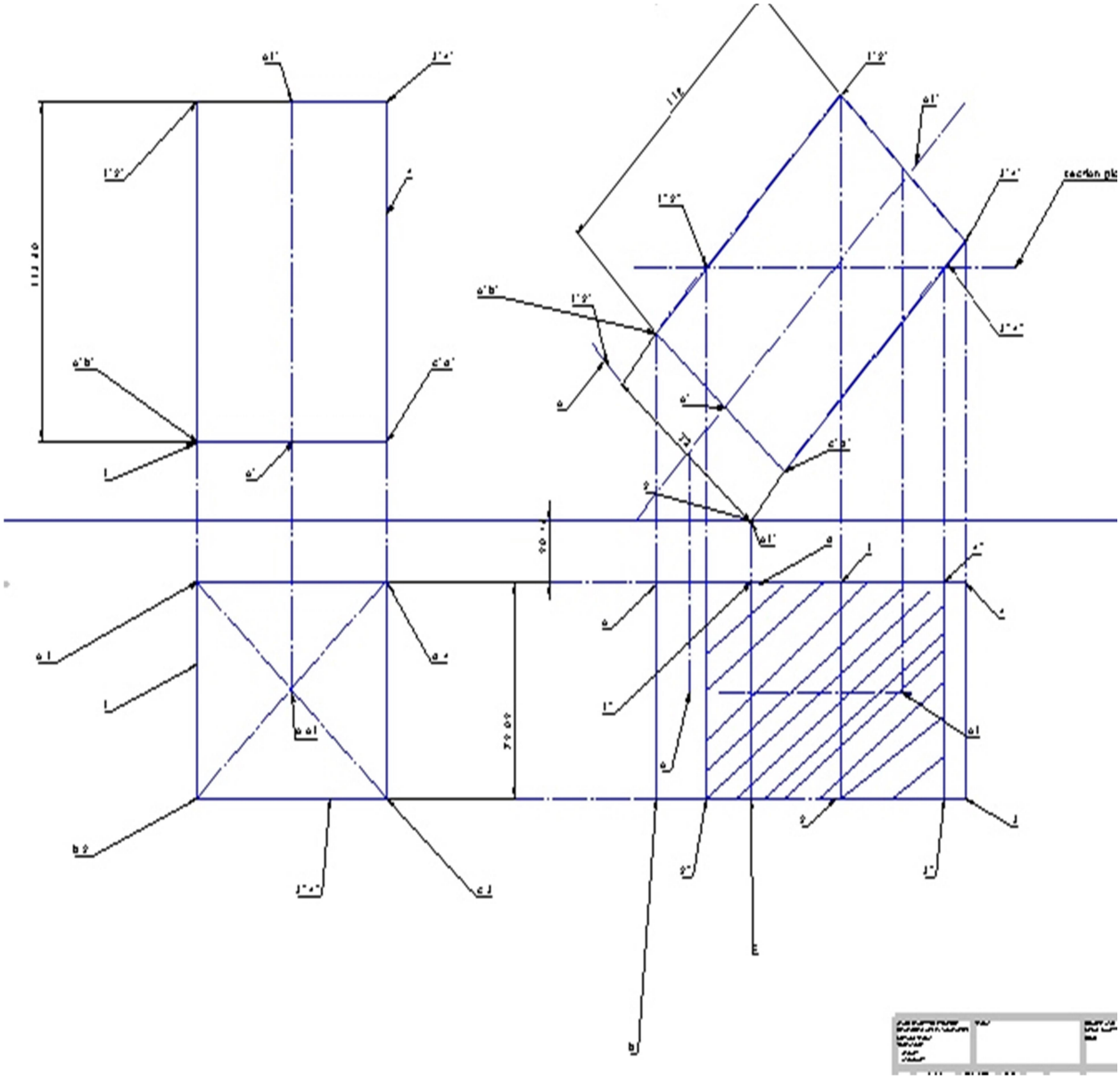
section pl

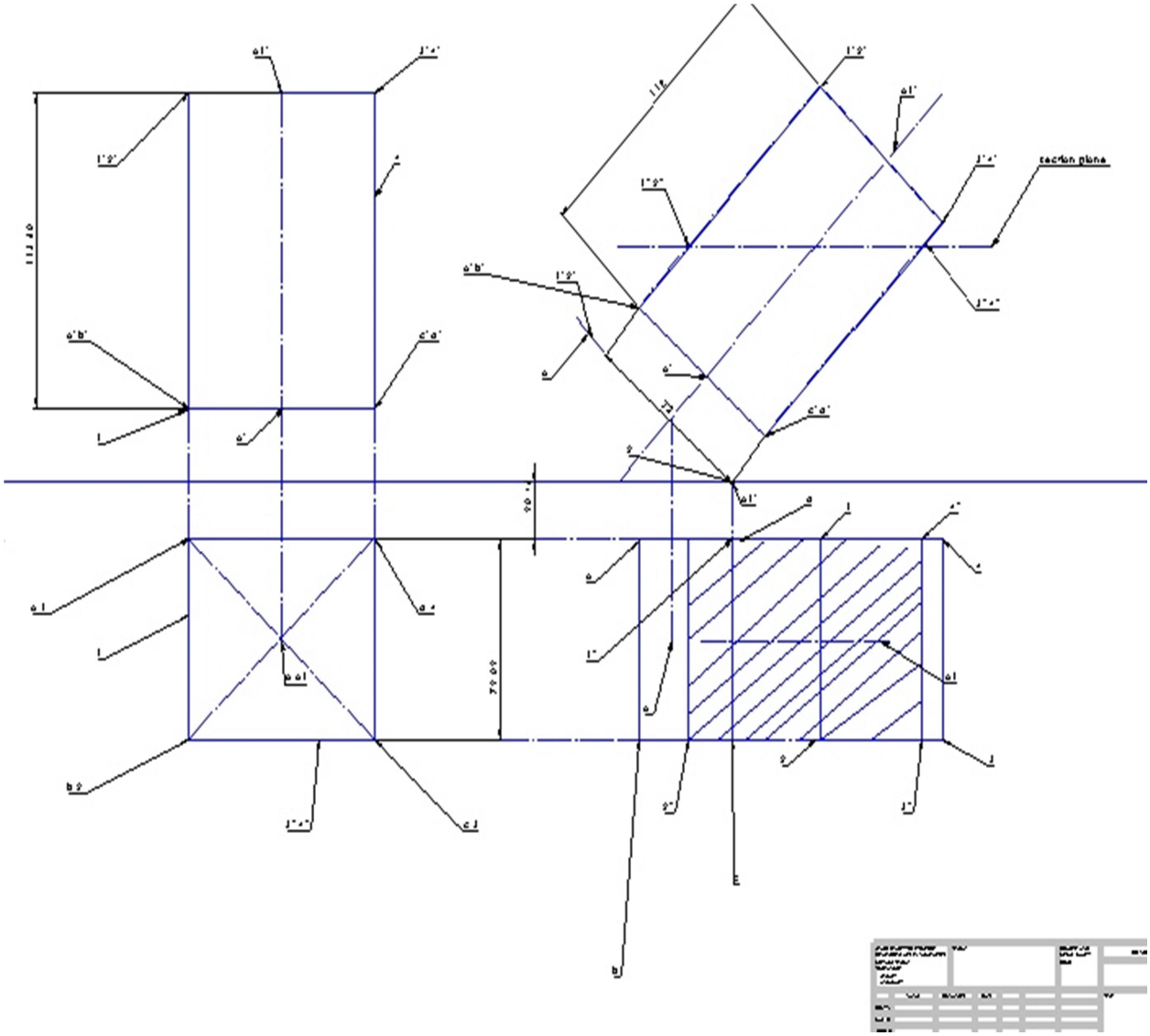
section plane